D2-PKG-1799E(b) 9/07

FOR MODELS: 1011, 1021, 1031, 1041, L1011, L1021, L1031, L1041 WITH 1/2" (13 mm) LATCH

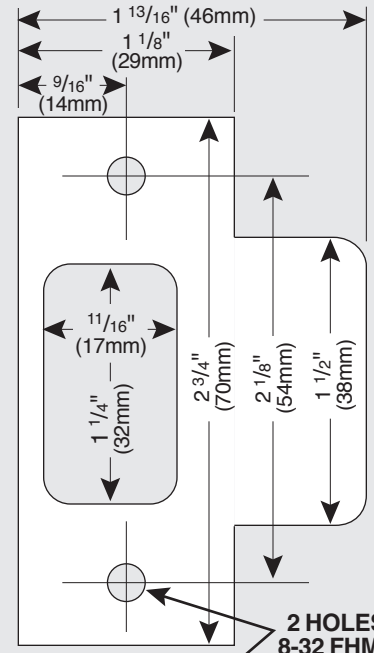

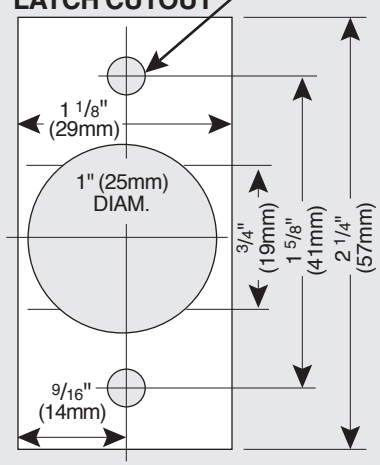

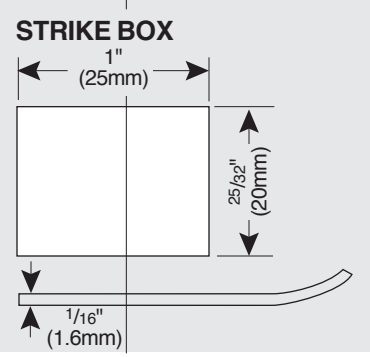

TEMPLATE B
(with passage set)
RIGHT HAND

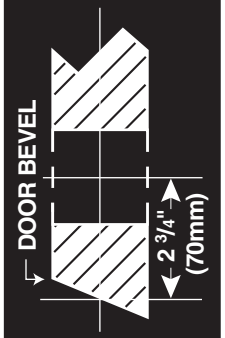

CAUTION
APPLY TEMPLATE AND DRILL FROM OUTSIDE BUT COMPENSATE FOR DOOR BEVEL IF ANY.

MARK CENTER OF DOOR THICKNESS

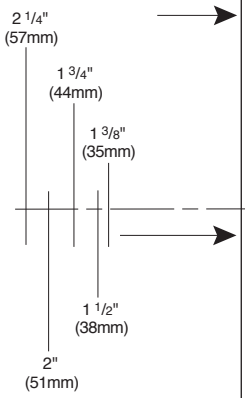

CROSS BORE 1" (25mm) DIAM. LATCH HOLE

THIS FLAP FOLDS OVER THE EDGE OF THE DOOR

BE SURE THE FOLD IS EXACTLY ON THE LINE

CAUTION : MARK ACCURATELY - BORE STRAIGHT

TOP

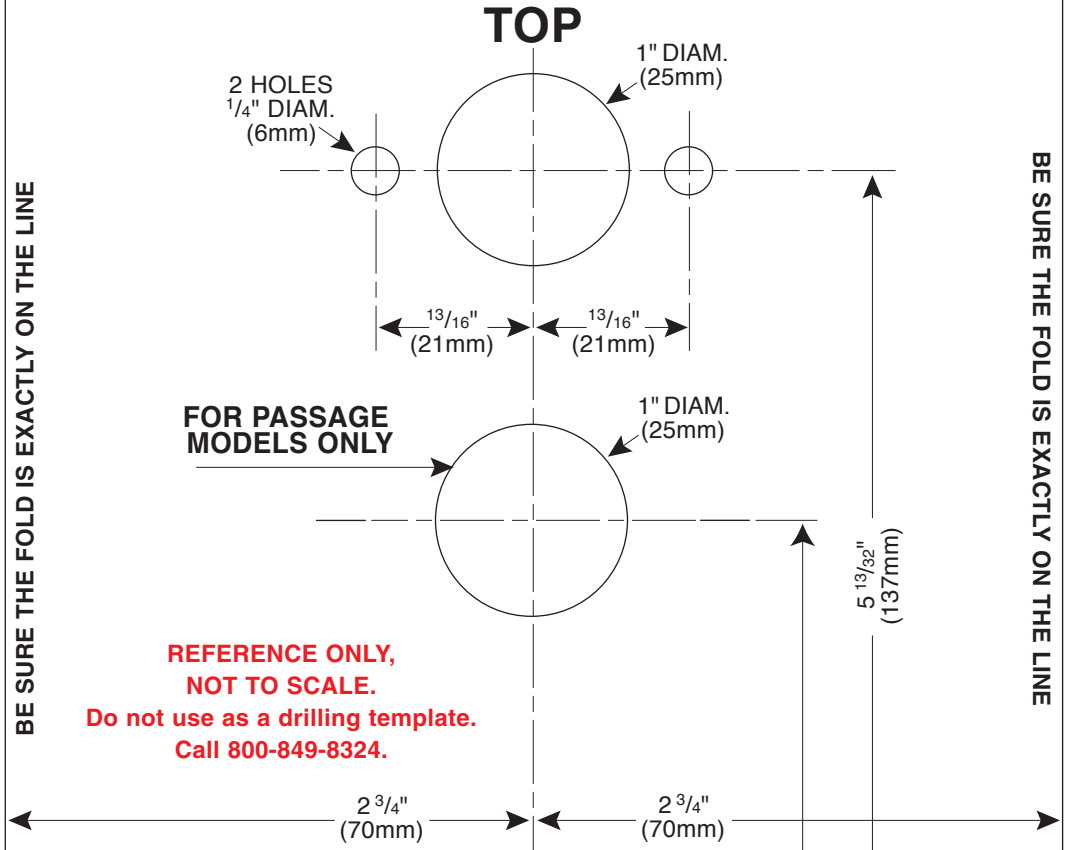

REFERENCE ONLY, NOT TO SCALE.
Do not use as a drilling template.
Call 800-849-8324.

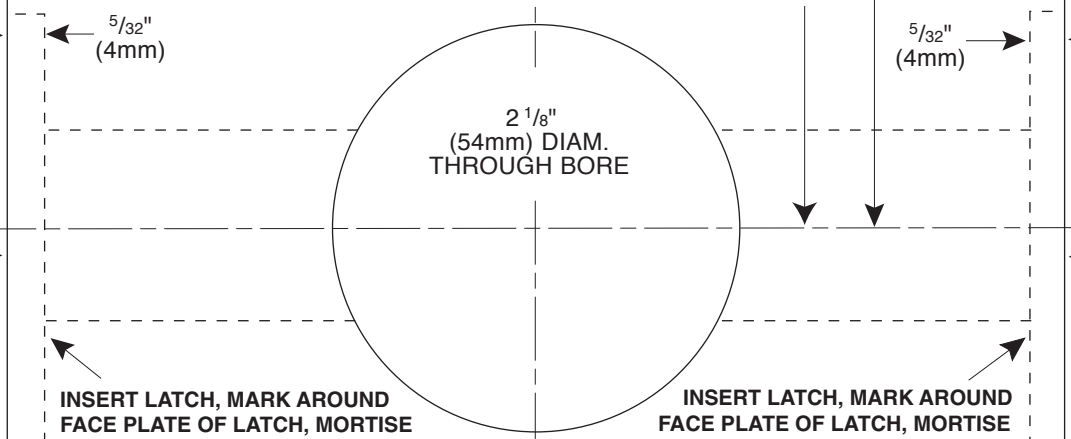

INSERT LATCH, MARK AROUND FACE PLATE OF LATCH, MORTISE TO DEPTH REQUIRED

INSERT LATCH, MARK AROUND FACE PLATE OF LATCH, MORTISE TO DEPTH REQUIRED

BOTTOM

THIS FLAP FOLDS OVER THE EDGE OF THE DOOR

BE SURE THE FOLD IS EXACTLY ON THE LINE

TEMPLATE B
(with passage set)
LEFT HAND

NOTE: Lock will accomodate doors 1 3/8" (35mm) to 2 1/4" (57mm) thick. Suitable reinforcement shall be provided by the hollow metal door manufacturer to prevent collapsing of door. When door silencers are to be installed, proper allowances must be made for strike location.

MARK CENTER OF DOOR THICKNESS

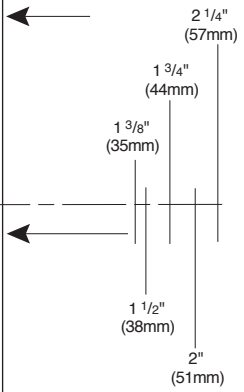

CROSS BORE 1" (25mm) DIA. LATCH HOLE